INNOVEX
LOGAN FISHING TOOLS

FISHING & INTERVENTION

FISHING BUMPER SUB

Manual D450

THE LEGACY LIVES ON

Contents

Fishing Bumper Sub

Overview 2
Use 2
Construction 2
Illustration 3
Operation 4
  Fishing Operations 4
  Drilling Operations 4
  Applying a Downward Blow 4
  Applying an Upward Blow 4
  Feeding-Off 4
Assembly 4
  Knocker Seal/Ring Installation 5
Maintenance 7
  Complete Disassembly 7
Complete Assemblies and Parts Lists ..... 8 – 19
Strength Data ..... 20 – 22
Recommended Tightening Torques 23

LEGAL NOTICE

All references to Bowen® part numbers in this literature are used to identify interchangeable tools and parts. Reference to such tools and parts does not imply that Logan Oil Tools is a licensee or is in any way affiliated with National Oilwell Varco. Logan Oil Tools does not sell, or offer to sell, National Oilwell Varco (Bowen) products.

"Bowen" is a registered trademark of National Oilwell Varco.

2nd Printing, April 2013. Rev. 1

OVERVIEW

The Logan Fishing Bumper Sub is a relatively inexpensive, dependable mechanical accessory tool that is suitable for all fishing operations — especially harsh, downhole applications and deep workover operations. It can also meet the demands of tools that require sharp, sustained bumping action to actuate or release them.

The primary purpose of the Fishing Bumper Sub is to enable the operator to release the fishing tool in the event it becomes impossible to pull the fish. It can provide the necessary vertical impact in either direction — upward or downward — and deliver the required torque to release the tool from the fish whether it is rotating or not. The tool's design allows full torque and unrestricted fluid circulation at all times. The Logan Fishing Bumper Sub can bump up or down to engage or disengage overshots or spears, or be used as a feed-off tool in milling or cutting operations.

There are several secondary uses for the Logan Fishing Bumper Sub: to bump down, to bump a solid downward blow, and to jar up in the hole. Other typical operations include releasing stuck drill pipe, drill collars, tubing, test tools, and safety joints. The fishing bumper sub can be used in conjunction with an overshot or spear.

USE

The Logan Fishing Bumper Sub is especially suited for deep fishing operations and light to medium drilling applications. Equally effective in either direction, the tool is also ideal for coring operations.

The Logan Fishing Bumper Sub delivers the sharp downward blow and torque required to disengage a fish when it is impossible to pull the fish. The tool can repeatedly bump in either direction or alternately bump up and down to dislodge drill pipe, reamers, drill collars, bits, or other tools that have become stuck.

The immediate bumping action prevents cuttings and cavings — especially sticky caving or heavy mud formations — from settling and wedging the drill string making it well suited for light to medium drilling operations. The tool is equally effective in either direction. If necessary, the operator can manipulate the drill string and deliver forceful blows to release the string. The free stroke feature enables the operator to accurately control the weight on bit or other tools. When properly used, this feature will aid in maintaining a straighter hole, thereby resulting in improved penetration and less bit wear.

The Fishing Bumper Sub is also an excellent safety device when working in very deep, crooked holes, and drilling out cement in heavy mud. The operator can manipulate the drill string as needed and deliver forceful blows to release the string if necessary.

The Logan Fishing Bumper Sub is also an ideal tool for coring operations. The bumping action effectively breaks cores sharply and cleanly for easy removal.

CONSTRUCTION

All components of he Logan Fishing Bumper Sub are constructed from high-strength, heat-treated alloy steel to withstand severe stress caused by tension, jarring, and torque.

The Fishing Bumper Sub is composed of five major parts: a mandrel, mandrel body, middle body, knocker, and a top sub. The critical seal point between the middle body and knocker is fitted with a knocker seal/ring assembly consisting of an o-ring seal, seal protector ring, and a seal non-extrusion ring to increase the life of the rings and prevent o-ring extrusion.

The Logan Fishing Bumper Sub comes with a standard box top connection and a pin bottom connection. Special connections, including left-hand threads, are available upon request.

Mandrel

The hexagon-shaped mandrel fits into the matching shape of the mandrel body. The mandrel freely moves up and down to provide a continuous source of downhole torque transmission through the mandrel body whether bumping or not. The standard 20-inch stroke length is suitable for most purposes, although longer stroke lengths of 30, 36, 42, 48, and 60 inches are available. The ends of the mandrel are made up with a knocker at the upper end and a mandrel body on the lower end.

Mandrel Body

The mandrel body slides on over the mandrel. The hexagon-shaped inside diameter of the mandrel body matches the shape of the mandrel. Transmitted torque is conveyed to the running string through the mandrel, middle body, and attached tool.

Middle Body
The inside diameter of the middle body is closely fitted to the outside diameter of the knocker and top sub at the upper end. The inside diameter of the middle body is closely fitted to the mandrel body at the lower end. The interior surface is highly polished to reduce frictional wear.

Knocker
The knocker screws onto the top of the mandrel. A lock screw on the lower end of the knocker tightens the knocker against the mandrel to prevent relative movement. The knocker material is specially selected for use in impact loading. It is closely fitted to restrict high frequency lateral vibration (chatter) that can shorten the life of the tool.

Knocker Seal/Ring Assembly
Two seal/ring assemblies are located on the upper end of the knocker. Each seal/ring assembly consists of an o-ring seal, a seal protector ring, and a seal non-extrusion ring. The non-extrusion rings prevent the o-rings from being pushed out or rolled out of position. As hydraulic pressure is applied (in either direction), these seal/ring assemblies reduce normal diametric clearance at the seal points to nearly zero.

Knocker seal rings, seal protector rings, and non-extrusion rings are provided on the standard knocker. Optional chevron packing sets are available and are recommended when circulation through the fishing bumper sub will be extensive.

Top Sub
The top sub is fitted to the upper end of the middle body and has a box connection.

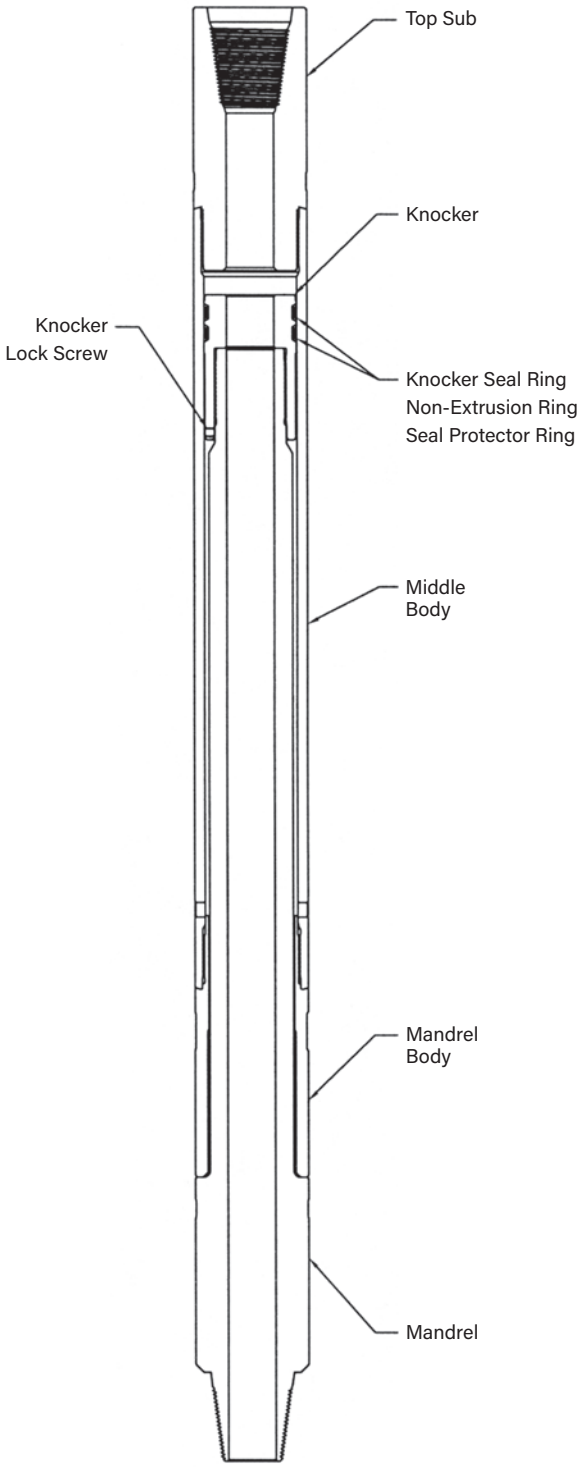

OPERATION

The Logan Fishing Bumper Sub is typically run directly above the spear, overshot, screw-in sub, or safety joint. The tool is designed to allow a vertical stroke — upward or downward — whether it is rotating or not, and is always available to the operator. The Fishing Bumper Sub will transmit full torque at all times during rotation and bumping operations.

When lift load is applied, the Fishing Bumper Sub will slide open until the knocker hits the mandrel body. Slacking weight off the string will cause the mandrel to slide back down the mandrel body until the bottom shoulder of the mandrel hits the top shoulder of the mandrel body.

Fishing Operations

A Fishing Bumper Sub should be included in the fishing string whenever a releasing type fishing tool will be used. If it becomes impossible to pull the fish, the operator will have means available to release the fishing tool. The Fishing Bumper Sub will deliver a sharp blow and transmit the torque required to disengage and release a fishing tool from the fish.

A properly made-up Fishing Bumper Sub is generally placed immediately above the fishing tool, safety joint, or unlatching joint.

Drilling Operations

The Fishing Bumper Sub is generally installed in the drill string immediately above the drill collars.

Applying a Downward Blow

At the surface, mark the pipe to indicate the open and closed positions of the Fishing Bumper Sub. Raise the fishing string to open the full stroke length (20 – 60 inches depending on the size of the tool) and allow for extra string stretch.

To deliver a sharp downward blow, sharply drop the string and abruptly stop with the brake approximately four (4) to six (6) inches above the closed position of the Fishing Bumper Sub. To deliver a solid downward blow, drop the full weight of the fishing string without braking. This will cause the lower end of the fishing string to drop downward and the Fishing Bumper Sub will close. If the fishing string has sufficient stretch and elasticity, the Fishing Bumper Sub will then deliver a series of downward blows to the tool below.

Applying an Upward Blow

At the surface, mark the pipe to indicate the open and closed positions of the Fishing Bumper Sub. Raise the fishing string to open the bumper sub and allow for additional string stretch. Drop the string by the amount of the stretch only and stop it abruptly with the brake. As the pipe rebounds at the bottom of the hole, the Fishing Bumper Sub will quickly reopen. This will cause the knocker to strike the lower end of the mandrel body with a solid upward blow.

Feeding-Off

When employing a Logan Fishing Bumper Sub as a feed-off tool, install the Fishing Bumper Sub in a cutting string several joints above a Logan Internal Cutter. In this operation, a Fishing Bumper Sub with a 20-inch stroke will pick up ten inches of the cutting string after the cutter is set. Only the predetermined weight of the pipe between the internal cutter and the Fishing Bumper Sub is applied to the cutter, thus ensuring smooth operation of the cutter.

ASSEMBLY

Check all parts to ensure that they are in good working condition before beginning assembly. Make sure the tool is the proper size for the operation.

Thoroughly clean and lubricate parts. If the tool will be stored for a long period, paint or lubricate the exterior surfaces to prevent corrosion.

NOTE: Do not paint or lubricate the seals. Paint, sunlight, solvents, and most lubricants are harmful to rub-ber products.

Refer to the photographs on page 5 and proceed with the knocker seal/ring assembly installation as follows. If using the optional chevron packing set, skip to step 5.

1. Starting with the lowest groove, replace the knocker seals.
   a. Carefully examine and thoroughly clean each groove. Smooth out any nicks or burrs with emery cloth.
   b. Matching the bevel of the non-extrusion ring to the bevel of the groove, slide the non-extrusion ring over the knocker. Carefully expand the non-extrusion ring to fit over the outside diameter of the knocker. ***Do not expand the non-extrusion ring more than is absolutely necessary.***
2. Press the seal protector ring into the groove next to the non-extrusion ring with the thumbs until the ring is firmly seated in the groove.
3. Install the O-rings:
   a. Stretch the O-ring until it is large enough to fit around the knocker.
   b. Insert the O-ring between the seal protector ring and non-extrusion ring.

KNOCKER SEAL/RING ASSEMBLY INSTALLATION

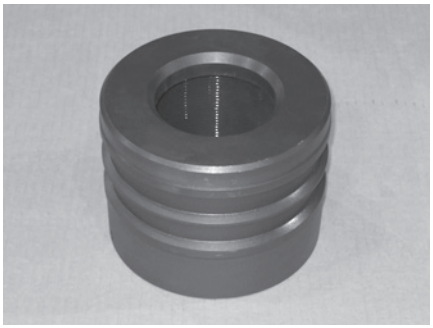

Before installation, carefully examine and clean each groove. Smooth out any nicks or burrs with emery cloth.

Matching the bevel of the non-extrusion ring to the bevel of the groove, carefully expand the non-extrusion ring to fit over the outside diameter of the knocker. Do not expand the non-extrusion ring more than absolutely necessary. Slide the non-extrusion ring over the knocker and into the groove.

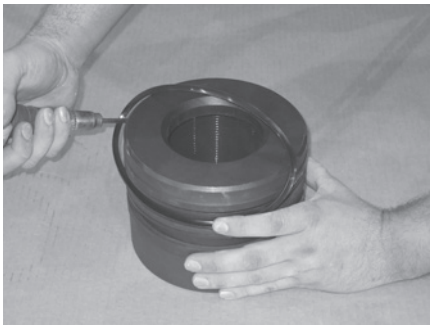

With the aid of the O-ring installation tool (Logan Part No. J1074, available upon request), press the seal protector ring into the groove next to the non-extrusion ring with the thumbs until the ring is firmly seated in the groove.

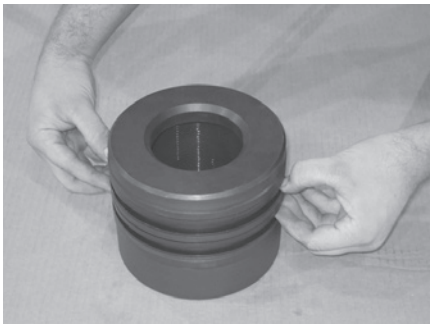

Install the O-ring. Stretch the o-ring until it is large enough to fit around the knocker.

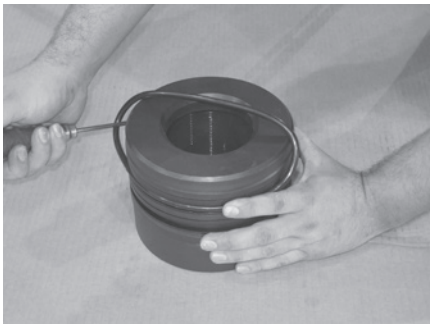

Using the O-ring installation tool, insert the O-ring in the groove between the seal protector ring and non-extrusion ring.

Repeat seal/ring installation procedure on the upper groove.

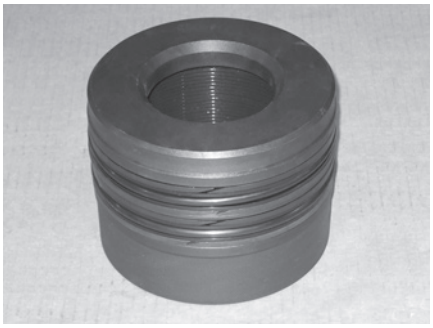

Completed knocker assembly with seal protector rings, non-extrusion rings, and O-rings correctly installed in the upper and lower grooves.

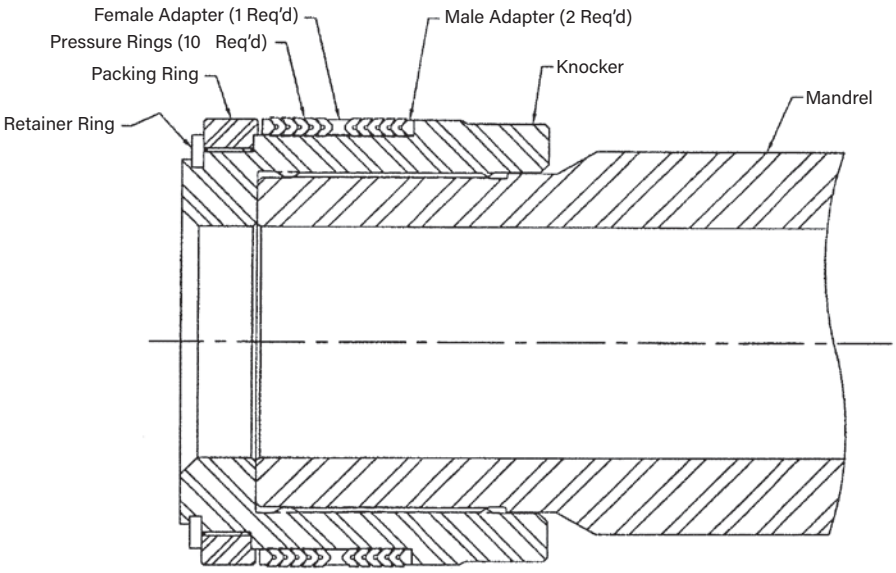

Chevron Packing

4. Repeat seal/ring installation procedure on the upper groove. Skip to step 6 to continue.
5. Install optional chevron packing according to the diagram above. Reinstall the packing ring and retainer ring.
6. Secure the upper end of the mandrel body horizontally into a suitable vise. Thoroughly coat the polished surfaces with a good grade of clean, lightweight oil.

CAUTION: Use only enough grip-ping action in the vise to secure the body. Avoid making heavy tool marks.

7. Align the hexagon shapes of the mandrel and mandrel body and slide the mandrel through the bottom of the mandrel body. Continue to gently push the mandrel through until the mandrel bumps against the mandrel body. Do not force the mandrel — the mandrel should freely move back and forth. If resistance is encountered, remove the mandrel and remove any foreign matter.
8. Lubricate and install the knocker on the upper end of the mandrel. Tighten.
9. Install the lock screw in the knocker. Make sure it locks onto the undercut provided on the mandrel.
10. Carefully slide the middle body over the knocker and mandrel to avoid damaging the knocker seals. Tighten the connection to the mandrel body.
11. Install top sub on middle body. Tighten the connection between the top sub and the upper end of the middle body.
12. Tighten all connections before running the tool in the hole. Refer to the Tightening Torques table on page 23.
13. Paint or lubricate exterior surfaces to prevent corrosion. If the tool will be stored outside, the exterior of the tool should be cleaned and painted, or coated with a heavy application of grease.

Assembly is now complete and the tool is ready for service.

If the tool will be stored for future service, install thread protectors and apply a good grade of thread dope to the tool joints.

MAINTENANCE

The wear-resistant Logan Fishing Bumper Sub requires minimal maintenance. Thoroughly wash the tool — inside and out — and remove all drilling mud and debris after each use. Lubricate cleaned tool to prevent corrosion. The knocker seal rings should be periodically examined for damage and wear. The tool should be disassembled and the rings replaced when damage is evident.

Complete Disassembly
Refer to the illustration on page 3 and proceed with disassembly as follows:

CAUTION: Use only enough grip-ping action in the vise to break the connections. Avoid making heavy tool marks.

1. Secure the Logan Fishing Bumper Sub a suitable vise, approximately in the middle of the mandrel body.
2. Remove the top sub and lay it aside.
3. Remove the middle body from the mandrel body and lay it aside.
4. Back-off or remove the knocker lock screw before removing the knocker to prevent damage to the mandrel.

CAUTION: Before removing the knocker, make certain the knocker lock screw is removed or backed-off. The knocker set screw could damage the mandrel.

5. Remove the knocker from the mandrel and lay it aside.

CAUTION: Do not wrench on the hard-faced bands between the wrench flats or gouge them with the sides of the wrench jaws. If they are inadvertently upset or otherwise damaged, remove the upset or burr with fine emery cloth or a hand file. Clean and lubricate.

8. Slide the mandrel out through the bottom of the mandrel body. Support the weight of the mandrel with a soft line or wire rope sling as it is removed.
9. Remove the mandrel and lay it aside.
10. Remove the mandrel body from the vise and lay it aside.
11. Skip to step 15 if the optional chevron packing set has been used.
12. Examine the knocker O-ring seals, seal protector rings, and seal non-extrusion rings for wear and/or damage. Remove seals and rings that show signs of wear and/or damage.
    a. Carefully insert the tip of either the bent-tip installation tool* (Logan Part No. J1073) or O-ring installation tool* (Logan Part No. J1074) between the O-ring and the seal protector ring. Carefully lift out the O-ring, taking care not to damage the seal protector ring or non-extrusion ring.

CAUTION: Do not run the installation tool around the groove under the rings. This will scratch and damage the grooves.

13. Examine the O-rings for damage or distortion. Check the seal protector rings and non-extrusion rings, using the forefinger to feel for burrs or other damage.
14. Remove all damaged seal protector rings and non-extrusion rings.
15. Inspect optional chevron packing set (if used) by removing the retainer ring and packing ring. Refer to the diagram on page 5. Replace chevron packing set if it is worn or damaged.
16. Thoroughly clean all disassembled parts in solvent and wipe dry with a clean, soft cloth. Lubricate parts with a thin coating of a good grade of clean lightweight oil.
17. Examine all parts for defects, especially polished surfaces, for pits or scratches. Parts that have become pitted or scratched must be replaced with new parts prior to reassembly.
18. Inspect the mandrel for upsets. Grind off upsets with a small hand file or grinder.

Disassembly is now complete.

** These installation tools are available from Logan upon request.*

Fishing Bumper Sub

CONNECTION		1-13/16 WFJ	1-1/4 API REG	2-3/8 EUE	2-3/8 API REG	2-3/8 API IF	2-3/8 API IF	2-3/8 EUE
OUTSIDE DIAMETER (INCHES)		1-13/16	2-1/4	3-1/8	3-5/32	3-3/8	3-3/4	3-3/4
INSIDE DIAMETER (INCHES)		3/8	1/2	1-17/32	1	1	1-1/2	1-7/8
STROKE (INCHES)		20	20	20	20	20	20	20
COMPLETE ASSEMBLY	**Logan Part No.**	**604-181**	**604-225**	**604-313**	**604-315**	**604-338**	**604-375**	**604-376**
	Bowen No.	10120	18785	42592	10105	10190	39887	39893
TOP SUB	**Logan Part No.**	**AF1000**	**AF1001**	**AF10015**	**AF1002**	**AF10025**	**AF1003**	**AF1004**
	Bowen No.	10121	18786	42593	10106	10191	39888	39894
MANDREL BODY	**Logan Part No.**	**AF2000**	**AF2001**	**AF20015**	**AF2002**	**AF20025**	**AF2003**	**AF2004**
	Bowen No.	10123	18788	42596	10108	10193	39890	39896
MIDDLE BODY	**Logan Part No.**	**AF3000-20**	**AF3001-20**	**AF30015-20**	**AF3002-20**	**AF30025-20**	**AF3003-20**	**AF3004-20**
(20-inch stroke)	Bowen No.	10122	18787	42594	10107	10192	39889	39895
MANDREL	**Logan Part No.**	**AF4000-20**	**AF4001-20**	**AF40015-20**	**AF4002-20**	**AF40025-20**	**AF4003-20**	**AF4004-20**
(20-inch stroke)	Bowen No.	10125	18789	42597	10110	10194	39891	39897
KNOCKER	**Logan Part No.**	**AF5000**	**AF5001**	**AF50015**	**AF5002**	**AF50025**	**AF5003**	**AF5004**
	Bowen No.	10126	18790	42595	10111	10195	39892	39898
NON-EXTRUSION RING	**Logan Part No.**	**L385-22**	**L385-27**	**L216-34**	**L387-6**	**L385-35**	**L216-38**	**L216-38**
	Bowen No.	385-22	385-27	216-34	387-6	385-35	216-38	216-38
	No. Req'd	4	4	4	4	4	4	4
SEAL PROTECTOR RING	**Part No.**	**L386-22**	**L386-27**	**L227-34**	**L388-6**	**L386-35**	**L227-38**	**L227-38**
	Bowen No.	386-22	386-27	227-34	388-6	386-35	227-38	227-38
	No. Req'd	4	4	4	4	4	4	4
KNOCKER SEAL RING	**Logan Part No.**	**568-217**	**568-222**	**568-331**	**568-228**	**568-332**	**568-335**	**568-335**
	Bowen No.	568217	568222	568331	568228	568332	568335	568335
	No. Req'd	2	2	2	2	2	2	2
KNOCKER LOCK SCREW	**Logan Part No.**	**...**	**...**	**AF6001**	**AF6000**	**AF6000**	**AF6000**	**AF6001**
	Bowen No.	...	...	54775	48879	48879	48879	54775

Logan Oil Tools reserves the right to change or discontinue designs without notice.

Special Notes:

(1) Standard stroke for Bumper Subs is 20". Only the Mandrel and Middle Body need to be ordered to convert a standard 20" stroke assembly to one of greater stroke length. All other parts interchange for a given size. When a long stroke assembly is ordered by assembly number, the entire tool is ordered. To convert, order only the Mandrel and Middle Body by part number.

When ordering, please specify:

(1) Name and number of assembly or part
(2) Connections, if other than standard
(3) Stroke length
(4) O.D., if other than standard

Recommended Spare Parts:

(1) 8 Non-Extrusion Rings
(2) 8 Seal Protector Rings
(3) 16 Knocker Seals

Fishing Bumper Sub

CONNECTION		1-13/16 WFJ	1-1/4 API REG	2-3/8 EUE	2-3/8 API REG	2-3/8 API IF	2-3/8 API IF	2-3/8 EUE
OUTSIDE DIAMETER (INCHES)		1-13/16	2-1/4	3-1/8	3-5/32	3-3/8	3-3/4	3-3/4
INSIDE DIAMETER (INCHES)		3/8	1/2	1-17/32	1	1	1-1/2	1-7/8
STROKE (INCHES)		20	20	20	20	20	20	20
COMPLETE ASSEMBLY	**Logan Part No.**	**604-181**	**604-225**	**604-313**	**604-315**	**604-338**	**604-375**	**604-376**
	Bowen No.	10120	18785	42592	10105	10190	39887	39893

OPTIONAL ACCESSORIES

CHEVRON PACKING KNOCKER ASSEMBLY — BREAKDOWN:								
COMPLETE ASSEMBLY	**Logan Part No.**	**...**	**...**	**...**	**...**	**...**	**...**	**...**
	Bowen No.	...	...	...	...	...	...	...
KNOCKER	**Logan Part No.**	**...**	**...**	**...**	**...**	**...**	**...**	**...**
	Bowen No.	...	...	...	...	...	...	
PACKING RING	**Logan Part No.**	**...**	**...**	**...**	**...**	**...**	**...**	**...**
	Bowen No.	...	...	...	...	...	...	...
CENTER RING	**Logan Part No.**	**...**	**...**	**...**	**...**	**...**	**...**	**...**
	Bowen No.	...	...	...	...	...	...	...
CHEVRON PACKING SET	**Logan Part No.**	**...**	**...**	**...**	**...**	**...**	**...**	**...**
	Bowen No.	...	...	...	...	...	...	...
RETAINING RING	**Logan Part No.**	**...**	**...**	**...**	**...**	**...**	**...**	**...**
	Bowen No.	...	...	...	...	...	...	...
PACKING RETAINER	**Logan Part No.**	**...**	**...**	**...**	**...**	**...**	**...**	**...**
	Bowen No.	...	...	...	...	...	...	...
	No. Req'd	...	...	...	...	...	...	...

Logan Oil Tools reserves the right to change or discontinue designs without notice.

Special Notes:

(1) Standard stroke for Bumper Subs is 20". Only the Mandrel and Middle Body need to be ordered to convert a standard 20" stroke assembly to one of greater stroke length. All other parts interchange for a given size. When a long stroke assembly is ordered by assembly number, the entire tool is ordered. To convert, order only the Mandrel and Middle Body by part number.

When ordering, please specify:

(1) Name and number of assembly or part
(2) Connections, if other than standard
(3) Stroke length
(4) O.D., if other than standard

Recommended Spare Parts:

(1) 8 Non-Extrusion Rings
(2) 8 Seal Protector Rings
(3) 16 Knocker Seals

Fishing Bumper Sub

CONNECTION		1-13/16 WFJ	1-1/4 API Reg	2-3/8 EUE	2-3/8 API Reg	2-3/8 API IF	2-3/8 API IF	2-3/8 EUE
OUTSIDE DIAMETER (INCHES)		1-13/16	2-1/4	3-1/8	3-5/32	3-3/8	3-3/4	3-3/4
INSIDE DIAMETER (INCHES)		3/8	1/2	1-17/32	1	1	1-1/2	1-7/8

30" STROKE

COMPLETE ASSEMBLY	**Logan Part No.**	**604-181**	**604-225**	**604-313**	**604-315**	**604-338**	**604-375**	**604-376**
	Bowen No.	29523	29529	46881	29535	29538	46863	46866
MANDREL	**Logan Part No.**	**AF4000-30**	**AF4001-30**	**AF40015-30**	**AF4002-30**	**AF40025-30**	**AF4003-30**	**AF4004-30**
	Bowen No.	29524	29530	46882	29536	29539	46864	46867
MIDDLE BODY	**Logan Part No.**	**AF3000-30**	**AF3001-30**	**AF30015-30**	**AF3002-30**	**AF30025-30**	**AF3003-30**	**AF3004-30**
	Bowen No.	29525	29531	46883	29537	29540	46865	46868

36" STROKE

COMPLETE ASSEMBLY	**Logan Part No.**	**604-181**	**604-225**	**604-313**	**604-315**	**604-338**	**604-375**	**604-376**
	Bowen No.	29574	29580	49608	29586	29589	46890	46893
MANDREL	**Logan Part No.**	**AF4000-36**	**AF4001-36**	**AF40015-36**	**AF4002-36**	**AF40025-36**	**AF4003-36**	**AF4004-36**
	Bowen No.	29575	29581	46909	29587	29590	46891	46894
MIDDLE BODY	**Logan Part No.**	**AF3000-36**	**AF3001-36**	**AF30015-36**	**AF3002-36**	**AF30025-36**	**AF3003-36**	**AF3004-36**
	Bowen No.	29576	29582	46910	29588	29591	46892	46895

42" STROKE

COMPLETE ASSEMBLY	**Logan Part No.**	**604-181**	**604-225**	**604-313**	**604-315**	**604-338**	**604-375**	**604-376**
	Bowen No.	29619	29625	46935	16933	29643	46917	46920
MANDREL	**Logan Part No.**	**AF4000-42**	**AF4001-42**	**AF40015-42**	**AF4002-42**	**AF40025-42**	**AF4003-42**	**AF4004-42**
	Bowen No.	29620	29626	46936	16935	26944	46918	46921
MIDDLE BODY	**Logan Part No.**	**AF3000-42**	**AF3001-42**	**AF30015-42**	**AF3002-42**	**AF30025-42**	**AF3003-42**	**AF3004-42**
	Bowen No.	29621	29627	46937	16934	26945	46919	46922

Logan Oil Tools reserves the right to change or discontinue designs without notice.

Special Notes:

(1) Standard stroke for Bumper Subs is 20". Only the Mandrel and Middle Body need to be ordered to convert a standard 20" stroke assembly to one of greater stroke length. All other parts interchange for a given size. When a long stroke assembly is ordered by assembly number, the entire tool is ordered. To convert, order only the Mandrel and Middle Body by part number.

When ordering, please specify:

(1) Name and number of assembly or part
(2) Connections, if other than standard
(3) Stroke length
(4) O.D., if other than standard

Recommended Spare Parts:

(1) 8 Non-Extrusion Rings
(2) 8 Seal Protector Rings
(3) 16 Knocker Seals

Fishing Bumper Sub

CONNECTION	1-13/16 WFJ	1-1/4 API Reg	2-3/8 EUE	2-3/8 API Reg	2-3/8 API IF	2-3/8 API IF	2-3/8 EUE
OUTSIDE DIAMETER (INCHES)	1-13/16	2-1/4	3-1/8	3-5/32	3-3/8	3-3/4	3-3/4
INSIDE DIAMETER (INCHES)	3/8	1/2	1-17/32	1	1	1-1/2	1-7/8

48" STROKE

COMPLETE ASSEMBLY	**Logan Part No.**	**604-181**	**604-225**	**604-313**	**604-315**	**604-338**	**604-375**	**604-376**
	Bowen No.	29682	29688	46962	16936	29694	46944	46947
MANDREL	**Logan Part No.**	**AF4000-48**	**AF4001-48**	**AF40015-48**	**AF4002-48**	**AF40025-48**	**AF4003-48**	**AF4004-48**
	Bowen No.	29683	29689	46963	16938	29695	46945	46948
MIDDLE BODY	**Logan Part No.**	**AF3000-48**	**AF3001-48**	**AF30015-48**	**AF3002-48**	**AF30025-48**	**AF3003-48**	**AF3004-48**
	Bowen No.	29684	29690	46964	16937	29696	46946	46949

60" STROKE

COMPLETE ASSEMBLY	**Logan Part No.**	**604-181**	**604-225**	**604-313**	**604-315**	**604-338**	**604-375**	**604-376**
	Bowen No.	29748	29754	46989	29760	29763	46971	46974
MANDREL	**Logan Part No.**	**AF4000-60**	**AF4001-60**	**AF40015-60**	**AF4002-60**	**AF40025-60**	**AF4003-60**	**AF4004-60**
	Bowen No.	29749	29755	46990	29761	29764	46972	46975
MIDDLE BODY	**Logan Part No.**	**AF3000-60**	**AF3001-60**	**AF30015-60**	**AF3002-60**	**AF30025-60**	**AF3003-60**	**AF3004-60**
	Bowen No.	29750	29756	46991	29762	29765	46973	46976

Logan Oil Tools reserves the right to change or discontinue designs without notice.

Special Notes:

(1) Standard stroke for Bumper Subs is 20". Only the Mandrel and Middle Body need to be ordered to convert a standard 20" stroke assembly to one of greater stroke length. All other parts interchange for a given size. When a long stroke assembly is ordered by assembly number, the entire tool is ordered. To convert, order only the Mandrel and Middle Body by part number.

When ordering, please specify:

(1) Name and number of assembly or part
(2) Connections, if other than standard
(3) Stroke length
(4) O.D., if other than standard

Recommended Spare Parts:

(1) 8 Non-Extrusion Rings
(2) 8 Seal Protector Rings
(3) 16 Knocker Seals

Fishing Bumper Sub

CONNECTION		2-7/8 API Reg	2-7/8 API IF	2-7/8 EUE	3-1/2 API IF	3-1/2 API IF	4-1/2 API FH	4-1/2 API IF
OUTSIDE DIAMETER (INCHES)		3-3/4	4-1/4	4-1/2	4-3/4	4-3/4	6	6-1/4
INSIDE DIAMETER (INCHES)		1-1/4	1-15/16	2-3/8	2	1-1/2	2	2-1/4
STROKE (INCHES)		20	20	20	20	20	20	20
COMPLETE ASSEMBLY	**Logan Part No.**	**604-377**	**604-425**	**604-450**	**604-475**	**604-476**	**604-600**	**604-625**
	Bowen No.	10090	41824	36794	39905	10225	10135	10257
TOP SUB	**Logan Part No.**	**AF1005**	**AF1006**	**AF1007**	**AF1008**	**AF10085**	**AF1009**	**AF1010**
	Bowen No.	10091	41825	36795	39906	10226	10136	1025
MANDREL BODY	**Logan Part No.**	**AF2005**	**AF2006**	**AF2007**	**AF2008**	**AF20085**	**AF2009**	**AF2010**
	Bowen No.	10093	10158	36797	39908	10228	10138	10267
MIDDLE BODY	**Logan Part No.**	**AF3005-20**	**AF3006-20**	**AF3007-20**	**AF3008-20**	**AF30085-20**	**AF3009-20**	**AF3010-20**
(20-inch stroke)	Bowen No.	10092	10157	36796	39907	10227	10137	10262
MANDREL	**Logan Part No.**	**AF4005-20**	**AF4006-20**	**AF4007-20**	**AF4008-20**	**AF40085-20**	**AF4009-20**	**AF4010-20**
(20-inch stroke)	Bowen No.	10095	41828	36798	39909	10229	10140	10268
KNOCKER	**Logan Part No.**	**AF5005**	**AF5006**	**AF5007**	**AF5008**	**AF50085**	**AF5009**	**AF5010**
	Bowen No.	10096	41829	36799	39910	10230	10141	10250
NON-EXTRUSION RING	**Logan Part No.**	**L385-37**	**L385-41**	**L216-44.5**	**L385-44**	**L385-44**	**L385-52**	**L385-54**
	Bowen No.	385-37	385-41	216-44.5	385-44	385-44	385-52	385-54
	No. Req'd	4	4	4	4	4	4	4
SEAL PROTECTOR RING	**Logan Part No.**	**L386-37**	**L386-41**	**L227-44.5**	**L386-44**	**L386-44**	**L386-52**	**L386-54**
	Bowen No.	386-37	386-41	227-44.5	386-44	386-44	386-52	386-54
	No. Req'd	4	4	4	4	4	4	4
KNOCKER SEAL RING	**Logan Part No.**	**568-334**	**568-338**	**568-341**	**568-341**	**568-341**	**568-349**	**568-427**
	Bowen No.	568334	568338	568341	568341	568341	568349	568427
	No. Req'd	2	2	2	2	2	2	2
KNOCKER LOCK SCREW	**Logan Part No.**	**AF6002**	**AF6000**	**AF6000**	**AF6000**	**AF6002**	**AF6003**	**AF6003**
	Bowen No.	54769	48879	48879	48879	54769	43305	43305

Logan Oil Tools reserves the right to change or discontinue designs without notice.

Special Notes:

(1) Standard stroke for Bumper Subs is 20". Only the Mandrel and Middle Body need to be ordered to convert a standard 20" stroke assembly to one of greater stroke length. All other parts interchange for a given size. When a long stroke assembly is ordered by assembly number, the entire tool is ordered. To convert, order only the Mandrel and Middle Body by part number.

When ordering, please specify:

(1) Name and number of assembly or part
(2) Connections, if other than standard
(3) Stroke length
(4) O.D., if other than standard

Recommended Spare Parts:

(1) 8 Non-Extrusion Rings
(2) 8 Seal Protector Rings
(3) 16 Knocker Seals

Fishing Bumper Sub

CONNECTION		2-7/8 API Reg	2-7/8 API IF	2-7/8 EUE	3-1/2 API IF	3-1/2 API IF	4-1/2 API FH	4-1/2 API IF
OUTSIDE DIAMETER (INCHES)		3-3/4	4-1/4	4-1/2	4-3/4	4-3/4	6	6-1/4
INSIDE DIAMETER (INCHES)		1-1/4	1-15/16	2-3/8	2	1-1/2	2	2-1/4
STROKE (INCHES)		20	20	20	20	20	20	20
COMPLETE ASSEMBLY	**Logan Part No.**	**604-377**	**604-425**	**604-450**	**604-475**	**604-476**	**604-600**	**604-625**
	Bowen No.	10090	41824	36794	39905	10225	10135	10257

OPTIONAL ACCESSORIES

CHEVRON PACKING KNOCKER ASSEMBLY								
COMPLETE ASSEMBLY	**Logan Part No.**	**25000-014**	**25000-015**	**25000-016**	**25000-017**	**25000-023**	**25000-018**	**25000-019**
	Bowen No.	30910	59191	62774	59177	81172	50321	62205
KNOCKER	**Logan Part No.**	**AF7000**	**AF7001**	**AF7002**	**AF7003**	**AF70035**	**AF7004**	**AF7005**
	Bowen No.	30911	59192	62775	59178	81173	50322	62206
PACKING RING	**Logan Part No.**	**AF8000**	**AF8001**	**AF8002**	**AF8003**	**AF80035**	**AF8004**	**AF8005**
	Bowen No.	30912	59193	62776	59179	81174	50323	62207
CENTER RING	**Logan Part No.**	**AF9000**	**AF9001**	**AF9002**	**AF9003**	**AF90035**	**AF9004**	**AF9005**
	Bowen No.	30913	59194	62777	59180	81175	50324	62208
CHEVRON PACKING SET	**Logan Part No.**	**AF10000**	**AF10001**	**AF10002**	**AF10003**	**AF100035**	**AF10004**	**AF10005**
	Bowen No.	30914	59195	62778	59181	81176	50325	62209
RETAINING RING	**Logan Part No.**	**AF11000**	**AF11001**	**AF11002**	**AF11003**	**AF110035**	**AF11004**	**AF11005**
	Bowen No.	19812	59196	59182	59182	81177	50326	13177
PACKING RETAINER	**Logan Part No.**	**AF12000**	**AF12001**	**AF12002**	**AF12003**	**...**	**AF12004**	**AF12005**
	Bowen No.	62345	59197	62780	59183	...	50009	62210
	No. Req'd	2	2	2	2	...	2	2

Logan Oil Tools reserves the right to change or discontinue designs without notice.

Special Notes:

(1) Standard stroke for Bumper Subs is 20". Only the Mandrel and Middle Body need to be ordered to convert a standard 20" stroke assembly to one of greater stroke length. All other parts interchange for a given size. When a long stroke assembly is ordered by assembly number, the entire tool is ordered. To convert, order only the Mandrel and Middle Body by part number.

When ordering, please specify:

(1) Name and number of assembly or part
(2) Connections, if other than standard
(3) Stroke length
(4) O.D., if other than standard

Recommended Spare Parts:

(1) 8 Non-Extrusion Rings
(2) 8 Seal Protector Rings
(3) 16 Knocker Seals

Fishing Bumper Sub

CONNECTION	2-7/8 API Reg	2-7/8 API IF	2-7/8 EUE	3-1/2 API IF	3-1/2 API IF	4-1/2 API FH	4-1/2 API IF
OUTSIDE DIAMETER (INCHES)	3-3/4	4-1/4	4-1/2	4-3/4	4-3/4	6	6-1/4
INSIDE DIAMETER (INCHES)	1-1/4	1-15/16	2-3/8	2	1-1/2	2	2-1/4

30" STROKE

COMPLETE ASSEMBLY	**Logan Part No.**	**604-377**	**604-425**	**604-450**	**604-475**	**604-476**	**604-600**	**604-625**
	Bowen No.	29541	46869	46875	46878	29562	16150	20005
MANDREL	**Logan Part No.**	**AF4005-30**	**AF4006-30**	**AF4007-30**	**AF4008-30**	**AF40085-30**	**AF4009-30**	**AF4010-30**
	Bowen No.	29542	46870	46876	46879	29563	16151	20007
MIDDLE BODY	**Logan Part No.**	**AF3005-30**	**AF3006-30**	**AF3007-30**	**AF3008-30**	**AF30085-30**	**AF3009-30**	**AF3010-30**
	Bowen No.	29543	46871	46877	46880	29564	16152	20006

36" STROKE

COMPLETE ASSEMBLY	**Logan Part No.**	**604-377**	**604-425**	**604-450**	**604-475**	**604-476**	**604-600**	**604-625**
	Bowen No.	25180	46896	46902	46905	29604	10147	29610
MANDREL	**Logan Part No.**	**AF4005-36**	**AF4006-36**	**AF4007-36**	**AF4008-36**	**AF40085-36**	**AF4009-36**	**AF4010-36**
	Bowen No.	25182	46897	46903	46906	29605	10149	29611
MIDDLE BODY	**Logan Part No.**	**AF3005-36**	**AF3006-36**	**AF3007-36**	**AF3008-36**	**AF30085-36**	**AF3009-36**	**AF3010-36**
	Bowen No.	25181	46898	46904	46907	29606	10148	29612

42" STROKE

COMPLETE ASSEMBLY	**Logan Part No.**	**604-377**	**604-425**	**604-450**	**604-475**	**604-476**	**604-600**	**604-625**
	Bowen No.	29646	46923	46929	46932	29661	29667	29670
MANDREL	**Logan Part No.**	**AF4005-42**	**AF4006-42**	**AF4007-42**	**AF4008-42**	**AF40085-42**	**AF4009-42**	**AF4010-42**
	Bowen No.	29647	46924	46930	46933	29662	29668	29671
MIDDLE BODY	**Logan Part No.**	**AF3005-42**	**AF3006-42**	**AF3007-42**	**AF3008-42**	**AF30085-42**	**AF3009-42**	**AF3010-42**
	Bowen No.	29648	46925	46931	46934	29663	29669	29672

Logan Oil Tools reserves the right to change or discontinue designs without notice.

Special Notes:

(1) Standard stroke for Bumper Subs is 20". Only the Mandrel and Middle Body need to be ordered to convert a standard 20" stroke assembly to one of greater stroke length. All other parts interchange for a given size. When a long stroke assembly is ordered by assembly number, the entire tool is ordered. To convert, order only the Mandrel and Middle Body by part number.

When ordering, please specify:

(1) Name and number of assembly or part
(2) Connections, if other than standard
(3) Stroke length
(4) O.D., if other than standard

Recommended Spare Parts:

(1) 8 Non-Extrusion Rings
(2) 8 Seal Protector Rings
(3) 16 Knocker Seals

Fishing Bumper Sub

CONNECTION	2-7/8 API Reg	2-7/8 API IF	2-7/8 EUE	3-1/2 API IF	3-1/2 API IF	4-1/2 API FH	4-1/2 API IF
OUTSIDE DIAMETER (INCHES)	3-3/4	4-1/4	4-1/2	4-3/4	4-3/4	6	6-1/4
INSIDE DIAMETER (INCHES)	1-1/4	1-15/16	2-3/8	2	1-1/2	2	2-1/4

48" STROKE

COMPLETE ASSEMBLY	**Logan Part No.**	**604-377**	**604-425**	**604-450**	**604-475**	**604-476**	**604-600**	**604-625**
	Bowen No.	29697	46956	46950	46959	29715	19880	29736
MANDREL	**Logan Part No.**	**AF4005-48**	**AF4006-48**	**AF4007-48**	**AF4008-48**	**AF40085-48**	**AF4009-48**	**AF4010-48**
	Bowen No.	29698	46957	46951	46960	29716	19881	29737
MIDDLE BODY	**Logan Part No.**	**AF3005-48**	**AF3006-48**	**AF3007-48**	**AF3008-48**	**AF30085-48**	**AF3009-48**	**AF3010-48**
	Bowen No.	29699	46958	46952	46961	29717	19882	29738

60" STROKE

COMPLETE ASSEMBLY	**Logan Part No.**	**604-377**	**604-425**	**604-450**	**604-475**	**604-476**	**604-600**	**604-625**
	Bowen No.	29766	46983	46977	46986	29781	29790	25385
MANDREL	**Logan Part No.**	**AF4005-60**	**AF4006-60**	**AF4007-60**	**AF4008-60**	**AF40085-60**	**AF4009-60**	**AF4010-60**
	Bowen No.	29767	46984	46978	46987	29782	29791	25387
MIDDLE BODY	**Logan Part No.**	**AF3005-60**	**AF3006-60**	**AF3007-60**	**AF3008-60**	**AF30085-60**	**AF3009-60**	**AF3010-60**
	Bowen No.	29768	46985	46979	46988	29786	29792	25386

Logan Oil Tools reserves the right to change or discontinue designs without notice.

Special Notes:

(1) Standard stroke for Bumper Subs is 20". Only the Mandrel and Middle Body need to be ordered to convert a standard 20" stroke assembly to one of greater stroke length. All other parts interchange for a given size. When a long stroke assembly is ordered by assembly number, the entire tool is ordered. To convert, order only the Mandrel and Middle Body by part number.

When ordering, please specify:

(1) Name and number of assembly or part
(2) Connections, if other than standard
(3) Stroke length
(4) O.D., if other than standard

Recommended Spare Parts:

(1) 8 Non-Extrusion Rings
(2) 8 Seal Protector Rings
(3) 16 Knocker Seals

Fishing Bumper Sub

CONNECTION		5-1/2 API Reg	6-5/8 API Reg	7-5/8 API Reg				
OUTSIDE DIAMETER (INCHES)		6-3/4	7-3/4	9				
INSIDE DIAMETER (INCHES)		2-3/4	3-1/2	4				
STROKE (INCHES)		20	20	20				
COMPLETE ASSEMBLY	**Logan Part No.**	**604-675**	**604-775**	**604-900**				
	Bowen No.	10690	26595	61596				
TOP SUB	**Logan Part No.**	**AF1011**	**AF1012**	**AF1013**				
	Bowen No.	10691	26596	61597				
MANDREL BODY	**Logan Part No.**	**AF2011**	**AF2012**	**AF2013**				
	Bowen No.	10693	26598	61599				
MIDDLE BODY	**Logan Part No.**	**AF3011-20**	**AF3012-20**	**AF3013-20**				
(20-inch stroke)	Bowen No.	10692	26597	61598				
MANDREL	**Logan Part No.**	**AF4011-20**	**AF4012-20**	**AF4013-20**				
(20-inch stroke)	Bowen No.	10694	26599	61600				
KNOCKER	**Part No.**	**AF5011**	**AF5012**	**AF5013**				
	Bowen No.	10695	26594	61601				
NON-EXTRUSION RING	**Logan Part No.**	**L385-58**	**L385-65**	**L216-68.5**				
	Bowen No.	385-58	385-65	216-68.5				
	No. Req'd	4	4	4				
SEAL PROTECTOR RING	**Logan Part No.**	**L386-58**	**L386-65**	**L227-68.5**				
	Bowen No.	386-58	386-65	227-68.5				
	No. Req'd	4	4	4				
KNOCKER SEAL RING	**Logan Part No.**	**568-431**	**568-438**	**568-441**				
	Bowen No.	568431	568438	568441				
	No. Req'd	2	2	2				
KNOCKER LOCK SCREW	**Logan Part No.**	**AF6003**	**AF6003**	**AF6004**				
	Bowen No.	43305	43305	54770				

Logan Oil Tools reserves the right to change or discontinue designs without notice.

Special Notes:

(1) Standard stroke for Bumper Subs is 20". Only the Mandrel and Middle Body need to be ordered to convert a standard 20" stroke assembly to one of greater stroke length. All other parts interchange for a given size. When a long stroke assembly is ordered by assembly number, the entire tool is ordered. To convert, order only the Mandrel and Middle Body by part number.

When ordering, please specify:

(1) Name and number of assembly or part
(2) Connections, if other than standard
(3) Stroke length
(4) O.D., if other than standard

Recommended Spare Parts:

(1) 8 Non-Extrusion Rings
(2) 8 Seal Protector Rings
(3) 16 Knocker Seals

Fishing Bumper Sub

CONNECTION		5-1/2 API Reg	6-5/8 API Reg	7-5/8 API Reg				
OUTSIDE DIAMETER (INCHES)		6-3/4	7-3/4	9				
INSIDE DIAMETER (INCHES)		2-3/4	3-1/2	4				
STROKE (INCHES)		20	20	20				
COMPLETE ASSEMBLY	**Logan Part No.**	**604-675**	**604-775**	**604-900**				
	Bowen No.	10690	26595	61596				

OPTIONAL ACCESSORIES

CHEVRON PACKING KNOCKER ASSEMBLY								
COMPLETE ASSEMBLY	**Logan Part No.**	**25000-020**	**25000-021**	**...**				
	Bowen No.	57013	61103	...				
KNOCKER	**Logan Part No.**	**AF7006**	**AF7007**	**...**				
	Bowen No.	57014	61104	...				
PACKING RING	**Logan Part No.**	**AF8006**	**AF8007**	**...**				
	Bowen No.	57015	61105	...				
CENTER RING	**Logan Part No.**	**AF9006**	**AF9007**	**...**				
	Bowen No.	62374	62378	...				
CHEVRON PACKING SET	**Logan Part No.**	**AF10006**	**AF10007**	**...**				
	Bowen No.	57016	61106	...				
RETAINING RING	**Logan Part No.**	**AF11006**	**AF11007**	**...**				
	Bowen No.	57017	59907	...				
PACKING RETAINER	**Logan Part No.**	**AF12006**	**AF12007**	**...**				
	Bowen No.	62375	62379	...				
	No. Req'd	2	2	...				

Logan Oil Tools reserves the right to change or discontinue designs without notice.

Special Notes:

(1) Standard stroke for Bumper Subs is 20". Only the Mandrel and Middle Body need to be ordered to convert a standard 20" stroke assembly to one of greater stroke length. All other parts interchange for a given size. When a long stroke assembly is ordered by assembly number, the entire tool is ordered. To convert, order only the Mandrel and Middle Body by part number.

When ordering, please specify:

(1) Name and number of assembly or part
(2) Connections, if other than standard
(3) Stroke length
(4) O.D., if other than standard

Recommended Spare Parts:

(1) 8 Non-Extrusion Rings
(2) 8 Seal Protector Rings
(3) 16 Knocker Seals

Fishing Bumper Sub

CONNECTION	5-1/2 API Reg	6-5/8 API Reg	7-5/8 API Reg				
OUTSIDE DIAMETER (INCHES)	6-3/4	7-3/4	9				
INSIDE DIAMETER (INCHES)	2-3/4	3-1/2	4				

30" STROKE

COMPLETE ASSEMBLY	**Logan Part No.**	**604-675**	**604-775**	**604-900**				
	Bowen No.	14520	29568	70408				
MANDREL	**Logan Part No.**	**AF4011-30**	**AF4012-30**	**AF4013-30**				
	Bowen No.	14522	29569	70410				
MIDDLE BODY	**Logan Part No.**	**AF3011-30**	**AF3012-30**	**AF3013-30**				
	Bowen No.	14521	29570	70409				

36" STROKE

COMPLETE ASSEMBLY	**Logan Part No.**	**604-675**	**604-775**	**604-900**				
	Bowen No.	13590	29616	70411				
MANDREL	**Logan Part No.**	**AF4011-36**	**AF4012-36**	**AF4013-36**				
	Bowen No.	13592	29617	70413				
MIDDLE BODY	**Logan Part No.**	**AF3011-36**	**AF3012-36**	**AF3013-36**				
	Bowen No.	13591	29618	70412				

42" STROKE

COMPLETE ASSEMBLY	**Logan Part No.**	**604-675**	**604-775**	**604-900**				
	Bowen No.	29676	29679	70414				
MANDREL	**Logan Part No.**	**AF4011-42**	**AF4012-42**	**AF4013-42**				
	Bowen No.	29677	29680	70416				
MIDDLE BODY	**Logan Part No.**	**AF3011-42**	**AF3012-42**	**AF3013-42**				
	Bowen No.	29678	29681	70415				

Logan Oil Tools reserves the right to change or discontinue designs without notice.

Special Notes:

(1) Standard stroke for Bumper Subs is 20". Only the Mandrel and Middle Body need to be ordered to convert a standard 20" stroke assembly to one of greater stroke length. All other parts interchange for a given size. When a long stroke assembly is ordered by assembly number, the entire tool is ordered. To convert, order only the Mandrel and Middle Body by part number.

When ordering, please specify:

(1) Name and number of assembly or part
(2) Connections, if other than standard
(3) Stroke length
(4) O.D., if other than standard

Recommended Spare Parts:

(1) 8 Non-Extrusion Rings
(2) 8 Seal Protector Rings
(3) 16 Knocker Seals

Fishing Bumper Sub

CONNECTION	5-1/2 API Reg	6-5/8 API Reg	7-5/8 API Reg				
OUTSIDE DIAMETER (INCHES)	6-3/4	7-3/4	9				
INSIDE DIAMETER (INCHES)	2-3/4	3-1/2	4				

48" STROKE

COMPLETE ASSEMBLY	**Logan Part No.**	**604-675**	**604-775**	**604-900**				
	Bowen No.	29742	29745	70417				
MANDREL	**Logan Part No.**	**AF4011-48**	**AF4012-48**	**AF4013-48**				
	Bowen No.	29743	29746	70419				
MIDDLE BODY	**Logan Part No.**	**AF3011-48**	**AF3012-48**	**AF3013-48**				
	Bowen No.	29744	29747	70418				

60" STROKE

COMPLETE ASSEMBLY	**Logan Part No.**	**604-675**	**604-775**	**604-900**				
	Bowen No.	29796	29799	70420				
MANDREL	**Logan Part No.**	**AF4011-60**	**AF4012-60**	**AF4013-60**				
	Bowen No.	29797	29800	70422				
MIDDLE BODY	**Logan Part No.**	**AF3011-60**	**AF3012-60**	**AF3013-60**				
	Bowen No.	29798	29801	70421				

Logan Oil Tools reserves the right to change or discontinue designs without notice.

Special Notes:

(1) Standard stroke for Bumper Subs is 20". Only the Mandrel and Middle Body need to be ordered to convert a standard 20" stroke assembly to one of greater stroke length. All other parts interchange for a given size. When a long stroke assembly is ordered by assembly number, the entire tool is ordered. To convert, order only the Mandrel and Middle Body by part number.

When ordering, please specify:

(1) Name and number of assembly or part
(2) Connections, if other than standard
(3) Stroke length
(4) O.D., if other than standard

Recommended Spare Parts:

(1) 8 Non-Extrusion Rings
(2) 8 Seal Protector Rings
(3) 16 Knocker Seals

Strength Data

20" STROKE

CONNECTION		1-13/16 WILSON FJ	1-1/4 API Reg	2-3/8 EUE	2-3/8 API Reg	2-3/8 API IF	2-3/8 API IF	2-3/8 EUE
OUTSIDE DIAMETER (INCHES)		1-13/16	2-1/4	3-1/8	3-5/32	3-3/8	3-3/4	3-3/4
INSIDE DIAMETER (INCHES)		3/8	1/2	1-17/32	1	1	1-1/2	1-7/8
STROKE LENGTH (INCHES)		20	20	20	20	20	20	20
COMPLETE ASSEMBLY	**Logan Part No.**	**604-181**	**604-225**	**604-313**	**604-315**	**604-338**	**604-375**	**604-376**
	Bowen No.	10120	18785	42592	10105	10190	39887	39893
TENSILE STRENGTH (LBS)		80,250	126,150	166,500	282,000	300,000	316,200	292,000
BUMPER SUB YIELD TORQUE (FT-LBS)		1,580	15,120	8,600	12,900	11,250	17,872	19,200
MAX OPERATING TORQUE (FT-LBS)								

30" STROKE

COMPLETE ASSEMBLY	Logan Part No.	604-181	604-225	604-313	604-315	604-338	604-375	604-376
	Bowen No.	29523	29529	46881	29535	29538	46863	46866
TENSILE STRENGTH (LBS)		80,250	146,000	166,500	282,000	300,000	316,200	292,000
BUMPER SUB YIELD TORQUE (FT-LBS)		1,580	16,700	8,600	12,900	11,250	17,872	19,200
MAX OPERATING TORQUE (FT-LBS)								

36" STROKE

COMPLETE ASSEMBLY	Logan Part No.	604-181	604-225	604-313	604-315	604-338	604-375	604-376
	Bowen No.	29574	29580	49608	29586	29589	46890	46893
TENSILE STRENGTH (LBS)		80,250	146,000	166,500	282,000	300,000	316,200	292,000
BUMPER SUB YIELD TORQUE (FT-LBS)		1,580	16,700	8,600	12,900	11,250	17,872	19,200
MAX OPERATING TORQUE (FT-LBS)								

42" STROKE

COMPLETE ASSEMBLY	Logan Part No.	604-181	604-225	604-313	604-315	604-338	604-375	604-376
	Bowen No.	29619	29625	46935	16933	29643	46917	46920
TENSILE STRENGTH (LBS)		80,250	132,000	166,500	282,000	283,500	316,200	292,000
BUMPER SUB YIELD TORQUE (FT-LBS)		1,440	2,760	8,600	12,900	10,880	17,872	19,200
MAX OPERATING TORQUE (FT-LBS)								

48" STROKE

COMPLETE ASSEMBLY	Logan Part No.	604-181	604-225	604-313	604-315	604-338	604-375	604-376
	Bowen No.	29682	29688	46962	16936	29694	46944	46947
TENSILE STRENGTH (LBS)		80,250	132,000	166,500	282,000	283,500	316,200	292,000
BUMPER SUB YIELD TORQUE (FT-LBS)		1,440	2,760	8,600	12,900	10,880	17,872	19,200
MAX OPERATING TORQUE (FT-LBS)								

60" STROKE

COMPLETE ASSEMBLY	Logan Part No.	604-181	604-225	604-313	604-315	604-338	604-375	604-376
	Bowen No.	29748	29754	46989	29760	29763	46971	46974
TENSILE STRENGTH (LBS)		80,250	132,000	166,500	240,750	283,500	316,200	292,000
BUMPER SUB YIELD TORQUE (FT-LBS)		1,440	2,760	8,600	9,000	10,880	17,872	19,200
MAX OPERATING TORQUE (FT-LBS)								

Strength Data

20" STROKE

CONNECTION		2-7/8 API Reg	2-7/8 API IF	2-7/8 EUE	3-1/2 API IF	3-1/2 API IF	4-1/2 API FH	4-1/2 API IF
OUTSIDE DIAMETER (INCHES)		3-3/4	4-1/4	4-1/2	4-3/4	4-3/4	6	6-1/4
INSIDE DIAMETER (INCHES)		1-1/4	1-15/16	2-3/8	2	1-1/2	2	2-1/4
STROKE LENGTH (INCHES)		20	20	20	20	20	20	20
COMPLETE ASSEMBLY	**Logan Part No.**	**604-377**	**604-425**	**604-450**	**604-475**	**604-476**	**604-600**	**604-625**
	Bowen No.	10090	41824	36794	39905	10225	10135	10257
TENSILE STRENGTH (LBS)		409,200	327,000	378,000	473,850	647,000	800,700	1,030,000
BUMPER SUB YIELD TORQUE (FT-LBS)		12,400	22,900	32,750	34,000	32,500	57,300	76,700
MAX OPERATING TORQUE (FT-LBS)								

30" STROKE

COMPLETE ASSEMBLY	Logan Part No.	604-377	604-425	604-450	604-475	604-476	604-600	604-625
	Bowen No.	29541	46875	46869	46878	29562	16150	20005
TENSILE STRENGTH (LBS)		409,200	327,000	378,000	473,850	647,000	800,700	1,015,000
BUMPER SUB YIELD TORQUE (FT-LBS)		12,440	22,900	32,750	34,000	32,500	57,300	61,700
MAX OPERATING TORQUE (FT-LBS)								

36" STROKE

COMPLETE ASSEMBLY	Logan Part No.	604-377	604-425	604-450	604-475	604-476	604-600	604-625
	Bowen No.	25180	46896	46902	46905	29604	10147	29610
TENSILE STRENGTH (LBS)		409,200	327,000	378,000	473,850	647,000	800,700	933,000
BUMPER SUB YIELD TORQUE (FT-LBS)		12,440	22,900	32,750	34,000	32,500	57,300	69,600
MAX OPERATING TORQUE (FT-LBS)								

42" STROKE

COMPLETE ASSEMBLY	Logan Part No.	604-377	604-425	604-450	604-475	604-476	604-600	604-625
	Bowen No.	29619	29625	46935	16933	29643	46917	46920
TENSILE STRENGTH (LBS)		409,200	132,000	378,000	282,000	283,500	800,700	933,000
BUMPER SUB YIELD TORQUE (FT-LBS)		12,440	2,760	32,750	12,900	10,880	57,300	69,600
MAX OPERATING TORQUE (FT-LBS)								

48" STROKE

COMPLETE ASSEMBLY	Logan Part No.	604-377	604-425	604-450	604-475	604-476	604-600	604-625
	Bowen No.	29682	29688	46962	16936	29694	46944	46947
TENSILE STRENGTH (LBS)		80,250	132,000	378,000	282,000	283,500	800,700	933,000
BUMPER SUB YIELD TORQUE (FT-LBS)		1,440	2,760	32,750	12,900	10,880	57,300	69,600
MAX OPERATING TORQUE (FT-LBS)								

60" STROKE

COMPLETE ASSEMBLY	Logan Part No.	604-377	604-425	604-450	604-475	604-476	604-600	604-625
	Bowen No.	29748	29754	46989	29760	29763	46971	46974
TENSILE STRENGTH (LBS)		80,250	132,000	378,000	240,750	283,500	800,700	933,000
BUMPER SUB YIELD TORQUE (FT-LBS)		1,440	2,760	32,750	9,000	10,880	57,300	69,600
MAX OPERATING TORQUE (FT-LBS)								

Strength Data

20" STROKE

CONNECTION		5-1/2 API Reg	6-5/8 API Reg	7-5/8 API Reg				
OUTSIDE DIAMETER (INCHES)		6-3/4	7-3/4	9				
INSIDE DIAMETER (INCHES)		2-3/4	3-1/2	4				
STROKE LENGTH (INCHES)		20	20	20				
COMPLETE ASSEMBLY	**Logan Part No.**	**604-675**	**604-775**	**604-900**				
	Bowen No.	10690	26595	61596				
TENSILE STRENGTH (LBS)		882,000	1,060,000	...				
BUMPER SUB YIELD TORQUE (FT-LBS)		82,800	137,500	...				
MAX OPERATING TORQUE (FT-LBS)								

30" STROKE

COMPLETE ASSEMBLY	**Logan Part No.**	**604-675**	**604-775**	**604-900**				
	Bowen No.	14520	29568	70408				
TENSILE STRENGTH (LBS)		882,000	1,060,000	...				
BUMPER SUB YIELD TORQUE (FT-LBS)		82,800	137,500	...				
MAX OPERATING TORQUE (FT-LBS)								

36" STROKE

COMPLETE ASSEMBLY	**Logan Part No.**	**604-675**	**604-775**	**604-900**				
	Bowen No.	13590	29616	70411				
TENSILE STRENGTH (LBS)		882,000	1,008,000	...				
BUMPER SUB YIELD TORQUE (FT-LBS)		82,800	134,700	...				
MAX OPERATING TORQUE (FT-LBS)								

42" STROKE

COMPLETE ASSEMBLY	**Logan Part No.**	**604-675**	**604-775**	**604-900**				
	Bowen No.	29676	29679	70414				
TENSILE STRENGTH (LBS)		745,000	1,008,000	...				
BUMPER SUB YIELD TORQUE (FT-LBS)		69,600	134,700	...				
MAX OPERATING TORQUE (FT-LBS)								

48" STROKE

COMPLETE ASSEMBLY	**Logan Part No.**	**604-675**	**604-775**	**604-900**				
	Bowen No.	29742	29745	70417				
TENSILE STRENGTH (LBS)		745,000	1,008,000	...				
BUMPER SUB YIELD TORQUE (FT-LBS)		69,600	134,700	...				
MAX OPERATING TORQUE (FT-LBS)								

60" STROKE

COMPLETE ASSEMBLY	**Logan Part No.**	**604-675**	**604-775**	**604-900**				
	Bowen No.	29796	29799	70420				
TENSILE STRENGTH (LBS)		745,000	1,008,000	...				
BUMPER SUB YIELD TORQUE (FT-LBS)		69,600	134,700	...				
MAX OPERATING TORQUE (FT-LBS)								

Recommended Tightening Torques

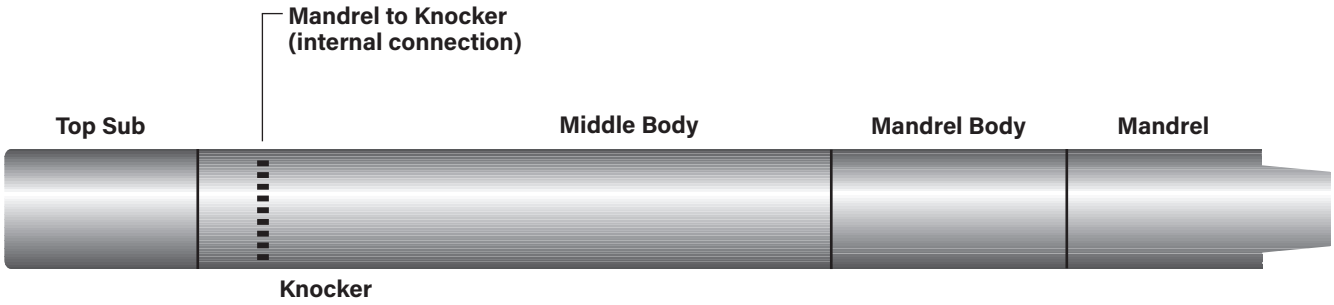

MAXIMUM RECOMMENDED TIGHTENING TORQUES (FT-LBS)

COMPLETE ASSEMBLY	Logan Part No.	604-181	604-225	604-313	604-315	604-338	604-375	604-376
	Bowen No.	10120	18785	42592	10105	10190	39887	39893
MANDREL TO KNOCKER		325	650	1,600	1,700	2,150	3,800	3,100
MANDREL BODY TO MIDDLE BODY		1,250	1,125	1,550	2,500	2,850	3,500	3,400
MIDDLE BODY TO TOP SUB		1,250	1,125	1,550	2,500	2,850	3,500	3,400
TORQUE@YIELD (FT-LBS)		2,500	2,250	3,100	5,050	5,800	6,800	6,800

MAXIMUM RECOMMENDED TIGHTENING TORQUES (FT-LBS)

COMPLETE ASSEMBLY	Logan Part No.	604-377	604-425	604-450	604-475	604-476	604-600	604-625
	Bowen No.	10090	41824	36794	39905	1022510135	10257	
MANDREL TO KNOCKER		2,300	3,400	4,650	5,450	6,050	9,850	12,000
MANDREL BODY TO MIDDLE BODY		4,700	6,000	5,075	9,100	8,950	19,000	18,650
MIDDLE BODY TO TOP SUB		4,700	6,000	5,075	9,100	8,950	19,000	18,650
TORQUE@YIELD (FT-LBS)		9,400	12,000	10,15018,250	17,95038,850	37,250		

MAXIMUM RECOMMENDED TIGHTENING TORQUES (FT-LBS)

COMPLETE ASSEMBLY	Logan Part No.	604-675	604-775	604-900				
	Bowen No.	10690	26595	61596				
MANDREL TO KNOCKER		10,500	20,250	31,250				
MANDREL BODY TO MIDDLE BODY		17,250	23,150	47,000				
MIDDLE BODY TO TOP SUB		17,250	23,150	47,000				
TORQUE@YIELD (FT-LBS)		34,500	46,200	94,450				

The makeup torques listed above are the maximum recommended makeup torques for each connection.
Values are set at 50% of the calculated theoretical yield torque. Torques this high are not required for all fishing jobs.
Lower values will result in less thread wear.

The tightening torque values were calculated assuming Itcolube or similar zinc-based grease was applied to all threads and shoulders.

NOTES

INNOVEX

NORTH AMERICA

CORPORATE HEADQUARTERS

4310 North Sam Houston Parkway East
Houston, TX 77032
T: +1 346 398 0000
sales@innovex-inc.com

EAST TEXAS & LOUISIANA

1138 West Harrison Rd
Longview, TX 75604
T: +1 903 759 2800

2212 Highway 662 N
Building C
Amelia LA 70340
T: +1 985 412 4980

SOUTH TEXAS

5746 Leopard Street
Corpus Christi, TX 78408
T: +1 361 452 2771

178 Oil Road
Pleasanton, TX 78064
T: +1 830 401 5887

FISHING TOOLS

1519 S. Flournoy Rd
Alice, TX 78332
T: +1 361 396 0139

10938 Lucerne St
Houston, TX 77016
T: +1 281 219 6613

601 McDonald St
Odessa, TX 79761
T: +1 432 580 7414

1034 Forum Dr
Broussard, LA 70518
T: +1 337 492 5228

118 Common Court
Houma, LA 70360
T: +1 985 868 7333

2415 2nd Ave West
Williston, ND 58801
T: +1 701 572 0565

1294 South 1500 East
Vernal, UT 84078
T: +1 435 781 2856

MIDCONTINENT

17712 W. Hwy 33
Cashion, OK 73016
T: +1 832 775 9140

2709 S. Ann Arbor Ave
Oklahoma City, OK 73128
T: +1 405 491 2658

PERMIAN BASIN

9513 W. County Rd 143
Midland, TX 79706
T: +1 979 314 3764

3111 W. 114th
Levelland, TX 79336
T: +1 806 215 7960

5910 S. County Rd 1270
Midland, TX 79706
T: +1 432 999 4013

651 McDonald Street
Odessa, TX 79761
T: +1 918 445 0588

NORTHWEST

1848 Old Route 33
Weston, WV 26452
T: +1 304 841 0821

109 N. Madison Ave
Grove City, PA 161257
T: +1 724 605 1397

ROCKIES | BAKKEN

13 Town & County Ln
Williston, ND 58802
T: +1 701 353 3334

480 Basher Dr
Berthoud, CO 80513
T: +1 720 552 9982

600 17th St, Suite 2800 South Tower
Denver, CO 80202
T: +1 601 218 3728

CANADA

4116-51 Avenue NW
Edmonton, Alberta, Canada T6E 5V8
T: +1 780 433 9957
F: +1 780 472 2351

LATIN AMERICA

MEXICO

Mexico City, Mexico
T: +52 55 5545 8111
M: +52 1 55 2668 1760

Carretera Villahermosa – Cárdenas Km 5.5, Bodega M1L6B2, Interior Parque Logístico Industrial Tabasco, Ria. Anacleto Canabal 4ta sección, Centro Tabasco, 86287
T: +52 9933 168887

COLOMBIA

Kra 100 No. 25 C 11 Bd 7, Centro empresarial Omega
Bogota, Columbia CP 110911
T: +57 1 756 1920

ARGENTINA

Espana 337 Cipolletti, Argentina
Luis Beltran 367 Neuquen, Argentina
T: +54 911 5643 4197

MIDDLE EAST & ASIA

UNITED ARAB EMIRATES

Office 2109, Jumeirah Bay X3 Tower
Cluster X, Jumeirah Lake Towers, Dubai, UAE
PO BOX 333648
T: +971 4 454 8616

SAUDI ARABIA

7958 Abu Al Husan Al Zahrawy St
Al Khalidiyah Ash Shamaliyah, Dammam 32231 3257
T: +966 13 814 6662

SULTANATE OF OMAN

Warehouse # 160Z, BBH Logistics City
Rusayl Industrial Area, Muscat, Sultanate of Oman
T: +968 225070199

EUROPE, CASPIAN & AFRICA

SCOTLAND

1 Minto Place
Altens Industrial Estate, Aberdeen, Scotland
AB12 3SN
T: +44 1224 659 000

FOR ALL LOCATIONS PLEASE VISIT THE LOCATIONS PAGE ON OUR WEBSITE.